Camera Data Interface w/Pre-Wired Harness

Fits Select Chrysler/Dodge Models 2011-2018

With 8.4-inch U-Connect RB5 or RE2 radio

Visit AxxessInterfaces.com for more detailed information about the product and up-to-date vehicle specific applications.

TABLE OF CONTENTS

Introduction 2
Interface Features 2
Configuration 2-4
Connections 5
Installation 6
Programming 7

APPLICATIONS

Chrysler		Dodge	
300	2011-2014	Charger	2011-2014
		Journey	2011-2018

TOOLS REQUIRED

- Crimping tool and connectors, or solder gun, solder, and heat shrink
- Tape • Wire cutter • Zip-ties

INTERFACE COMPONENTS

- AXAC-CH3 interface
- AXAC-CH3 interface harness
- AXAC-CH3 vehicle harness (qty. 2)
  - 22-pin T-harness
  - 22-pin T-harness (cam harness)

INTERFACE FEATURES *(see next page)*

REQUIRED ITEMS

Update Cable: AXUSB-MCBL (sold separately)
Axxess Updater Program

ATTENTION: With the key out of the ignition, disconnect the negative battery terminal before installing this product. Ensure that all installation connections, especially the air bag indicator lights, are plugged in before reconnecting the battery or cycling the ignition to test this product. NOTE: Refer also to the instructions included with the aftermarket accessory before installing this device.

© COPYRIGHT 2026 METRA ELECTRONICS CORPORATION

INTRODUCTION

The is a camera switching interface that provides up to (3) additional camera inputs to the factory radio, while still retaining the factory camera. With this interface a front camera, and/or side cameras, can be added to the factory radio. The cameras function automatically, no human interaction required, unless desired to do so. The interface can also be used if the vehicle doesn't come equipped with a backup camera, adding up to (4) cameras in this scenario. Axxess recommends cameras from the iBEAM product line for best results.

INTERFACE FEATURES

- Retains the factory backup camera while adding up to three additional CAN-activated cameras (4 total camera inputs)
- Includes AXAC camera interface and vehicle-specific harness
- Programmable 12-volt, 5-amp switched output (configured via the Axxess Updater program)
- Reverse trigger generated through CAN bus communication
- Turn signal trigger generated through CAN bus communication
- Four (4) programmable camera control wires (configured via the Axxess Updater program)
- Can also be manually controlled and used with an aftermarket radio
- VSS (Vehicle Speed Sense) input and output
- Micro "B" USB updatable

CONFIGURATION

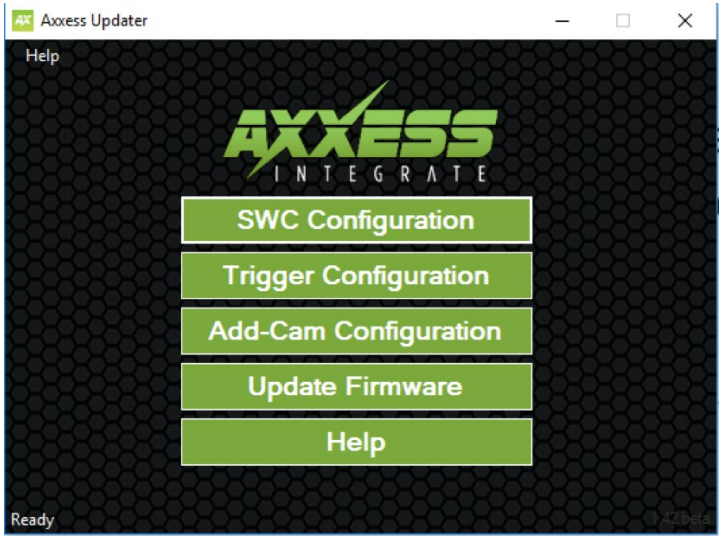

- Download and install the Axxess Updater available at: AxxessInterfaces.com
- Connect the AXUSB-MCBL update cable (sold separately) between the interface and the computer. The cable will connect into the micro-B USB port in the interface.
- Open the Axxess Updater and wait until the word **Ready** is listed in the bottom left of the screen.
- Select **Add-Cam Configuration**.

Continued on the next page

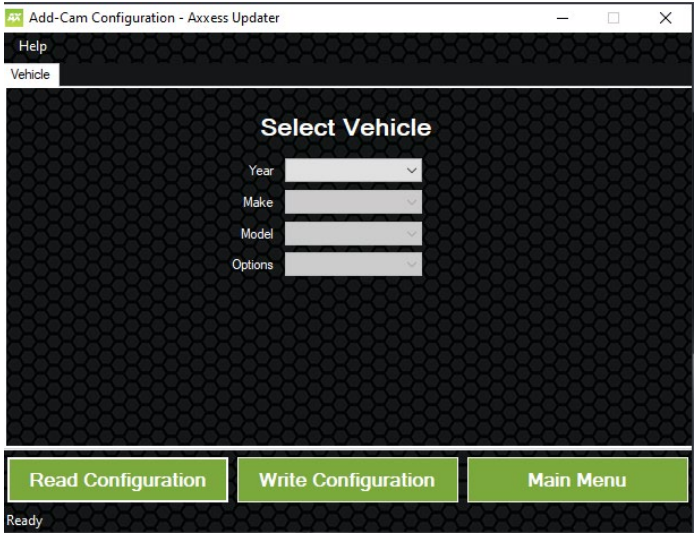

- Select the vehicle in the drop down list. A tab labeled **Configuration** will appear after the vehicle has been selected.

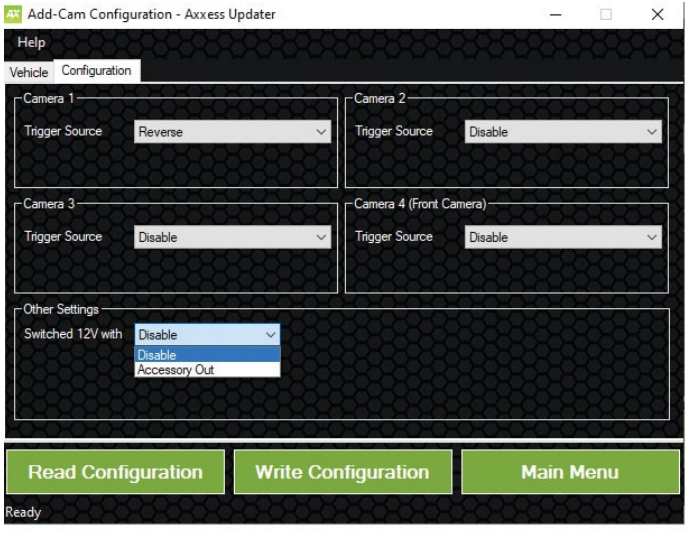

- Under **Configuration**, configure the (4) video trigger inputs to the desired settings. †
- Once all selections have been configured, press **Write Configuration** to save the settings.
- Unplug the update cable from the interface and computer.

† Refer to the following page for more information.

Continued on the next page

Video trigger legend

- Disable (will turn off the input)
- Backup Camera (dedicated backup camera)
- Left Blinker (will be used for activation)
- Right Blinker (will be used for activation)
- Control 1 (positive trigger activation)
- Control 1 (negative trigger activation)
- Control 2 (positive trigger activation)
- Control 2 (negative trigger activation)
- Control 3 (positive trigger activation)
- Control 3 (negative trigger activation)
- Control 4 (positive trigger activation)
- Control 4 (negative trigger activation)
- Auto (Reverse -> Drive) will activate once that sequence is seen (only available for video trigger 4)

Other Settings

Switched 12v with

- **Disable:** Turns off the 12v from the camera 12v **(Red)** wire
- **Accessory Out:** Accessory Out:

Video trigger description

- **Reverse camera:** Dedicated by default to Video Trigger 1. Will activate the backup camera while the vehicle is in reverse.
- **Left blinker:** Activation of the left turn signal will activate the left camera.
- **Right blinker:** Activation of the right turn signal will activate the right camera.
- **Auto (reverse -> drive):** Available only for Video Trigger 4, when installing a front camera. With this feature selected, the camera will activate automatically once a reverse-then-drive sequence is seen from the vehicle. Example of this scenario would be while parallel parking the vehicle. As an alternative, a control wire can be used instead to manually activate the camera.

  Note: Auto (Reverse -> Drive) will disable the camera once 15 MPH is reached. A control wire activated will also disable the camera.

  Note: If the control wire is activated while driving, the camera will activate and deactivate during stop-and-go traffic.
- **Control 1-4 (positive or negative) trigger activation wires:** Can be used as a positive or negative trigger to manually activate a camera via a toggle switch, or similar device.

CONNECTIONS

For models with a factory backup camera:

The camera signal will need to be interrupted and connected to the corresponding input/output RCA jacks from the interface.

- Connect the RCA jack from the **AXAC-CH3 vehicle harness** labeled “Camera input”, to the RCA jack from the **AXAC-CH3 interface harness** labeled “Camera output”.
- Connect the RCA jack from the **AXAC-CH3 vehicle harness** labeled “Camera output”, to the RCA jack from the **AXAC-CH3 interface harness** labeled “Camera 1”.
- Disregard the following (3) wires: **Blue/Green**, **Green/Blue**, **Red**

For models without a factory backup camera:

- Connect the RCA jack from the **AXAC-CH3 vehicle harness** labeled “Camera input”, to the RCA jack from the **AXAC-CH3 interface harness** labeled “Camera output”.
- Connect the RCA jack from the **AXAC-CH3 interface harness** labeled “Camera 1”, to the aftermarket backup camera.
- Disregard the RCA jack labeled “Camera output” from the **AXAC-CH3 vehicle harness**.
- Connect the **Red** wire from the **AXAC-CH3 interface harness** labeled “Camera 12V”, to the power wire from the aftermarket backup camera.
- Disregard the following (2) wires: **Blue/Green**, **Green/Blue**

Camera Input:

Camera 1	Backup camera input
Camera 2	Left or right camera, user assignable
Camera 3	Left or right camera, user assignable
Camera 4	Front camera

Analaog control trigger wires:

The (optional) analog control wires can be used with either a negative or positive trigger, depending on how they are configured in the Axxess Updater. These wires will only be used for manual control of the camera(s). Otherwise disregard them.

Control Wire	**Wire Color**
Control 1	Gray/Blue
Control 2	Gray/Red
Control 3	Orange
Control 4	Orange/White

With the ignition cycled off:

1. Remove the harnesses from the factory radio, then install the **AXAC-CH3 vehicle harness** in between.
2. Connect the **AXAC-CH3 vehicle harness** to the **AXAC-CH3 interface harness**.
3. Connect the **AXAC-CH3 interface harness** to the **AXAC-CH3 interface**.
4. Make sure the camera(s) is connected to the appropriate input.
5. Make sure the interface has been configured beforehand as shown in the Configuration section. Failure to configure the interface will result in the interface not functioning properly.

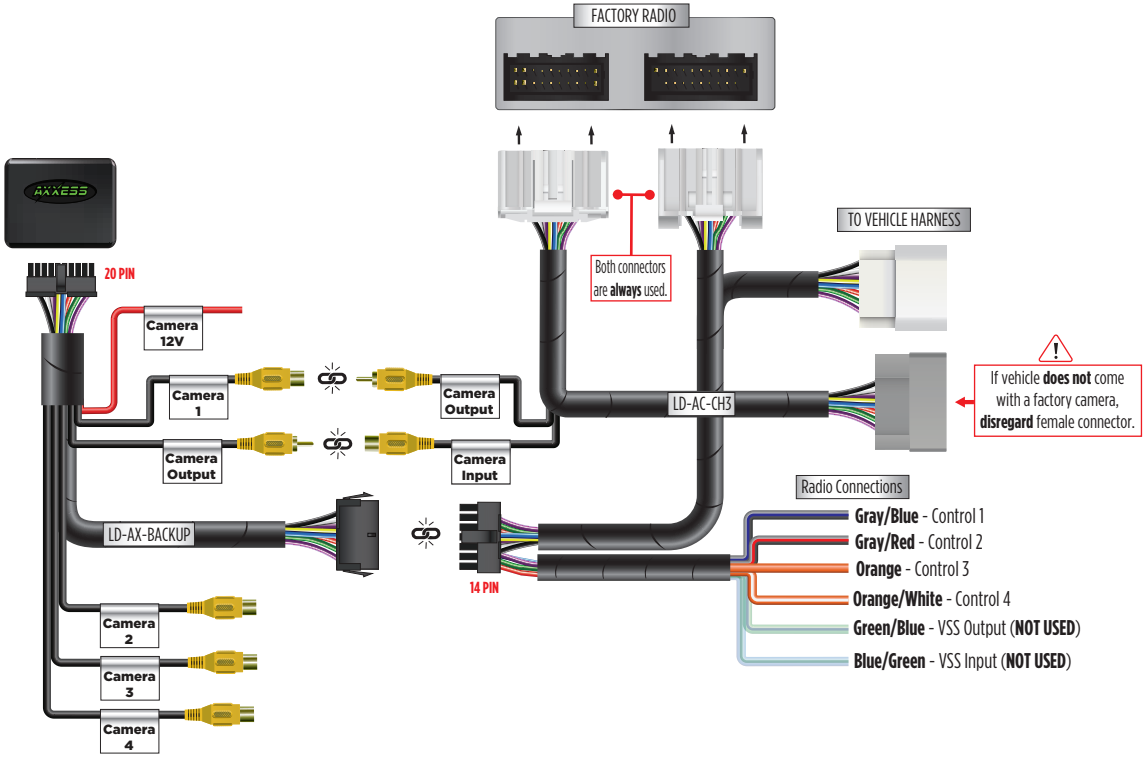

PROGRAMMING

For models with a factory backup camera:

1. Cycle the ignition on and wait until the LED in the interface comes on.

Note: If the LED doesn't come on within a few seconds, yet blinks instead, turn the key to the off position, disconnect the interface, check all connections, reconnect the interface, and then try again.

2. Test all functions of the installation for proper operation.

For models without a factory backup camera:

The factory radio requires two 5-minute key cycles to accept the interface.

1. With the ignition cycled off and all doors shut, wait for the dome light to go out.

2. Cycle the ignition on for 30-seconds.

3. Cycle the ignition off, wait for the dome light to go out, then wait 5-minutes.

4. Cycle the ignition on for 30-seconds.

5. Cycle the ignition off, wait for the dome light to go out, then wait 5-minutes.

6. Cycle the ignition on, then test all functions of the installation for proper operation.

Having difficulties? We're here to help.

Contact our Tech Support line at:
386-257-1187

Or via email at:
techsupport@metra-autosound.com

Tech Support Hours (Eastern Standard Time)

Monday - Friday: 9:00 AM - 7:00 PM
Saturday: 10:00 AM - 5:00 PM
Sunday: 10:00 AM - 4:00 PM

Metra recommends MECP certified technicians

© COPYRIGHT 2026 METRA ELECTRONICS CORPORATION