HEISE®
LED LIGHTING SYSTEMS

HID REPLACEMENT LED BULBS

30
LEDS PER BULB

WATER RESISTANT

DURABLE AEROSPACE-GRADE ALUMINUM

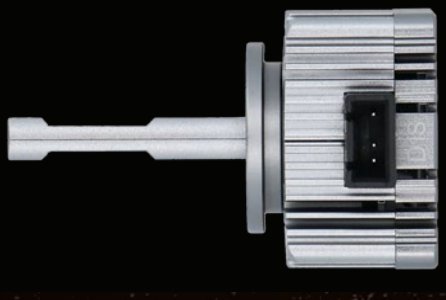

50,000
HOUR LIFESPAN

10,000
LUMENS | 90W

300%
BRIGHTER THAN HALOGEN

A built-in ball bearing fan ensures effective airflow through or past the heatsink.

www.facebook.com/HeiseLED

www.youtube.com/user/MetraElectronics

www.instagram.com/HeiseLED

Order Anytime Day or Night at www.MetraDealer.com

Download Catalogs at www.MetraOnline.com

HEISELED.COM | 460 WALKER STREET | HOLLY HILL, FL 32117 | 386.257.2956 | METRADEALER.COM

WARNING: THIS LIGHTING PRODUCT IS SOLD FOR OFF-ROAD USE ONLY. This product should not be used on the road. Keep your original factory bulbs so that you can replace them for use on public roads. Keep the box that the new bulbs came in to store the bulbs and be sure to handle them with care when removing and re-installing.

HEISE®
LED LIGHTING SYSTEMS

A BETTER DESIGN FROM THE INSIDE OUT

PLUG-N-PLAY LIGHTING

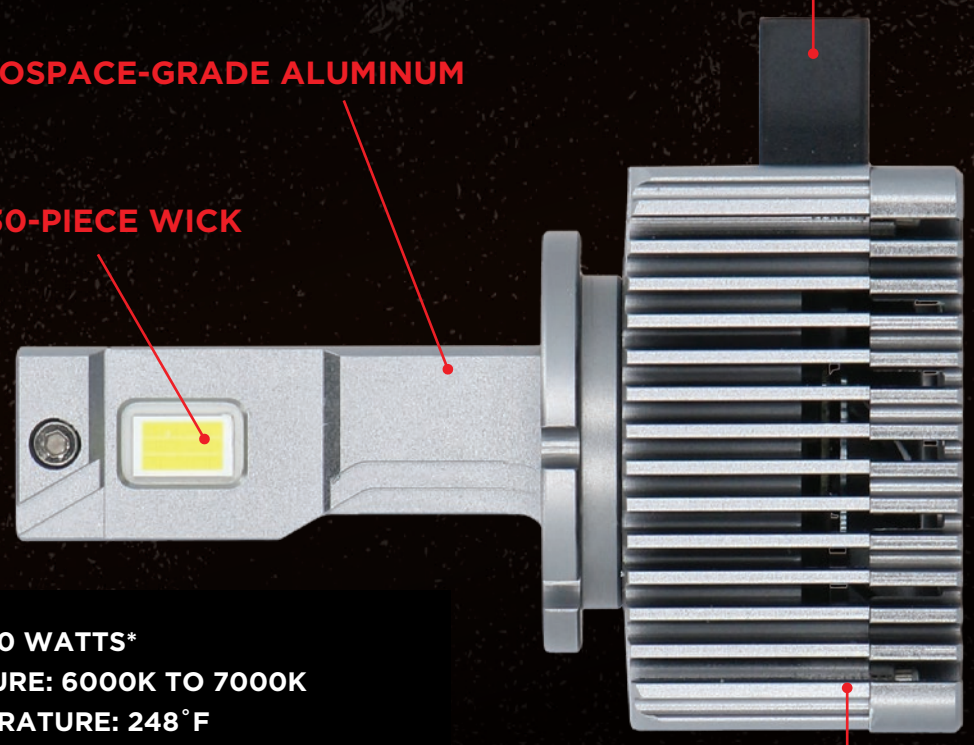

- ✔ 10,000 LUMENS / 90 WATTS*
- ✔ COLOR TEMPERATURE: 6000K TO 7000K
- ✔ OPERATING TEMPERATURE: 248˚F
- ✔ INSTANTANEOUS FULL LUMEN START UP
- ✔ 50,000+ HOUR LIFESPAN
- ✔ IP67 RATED
- ✔ SOLD AS A PAIR
- ✔ 3-YEAR WARRANTY

* RATING FOR BULB SET

www.facebook.com/HeiseLED | www.youtube.com/user/MetraElectronics | www.instagram.com/HeiseLED | Order Anytime Day or Night at www.MetraDealer.com | Download Catalogs at www.MetraOnline.com

HEISELED.COM | 460 WALKER STREET | HOLLY HILL, FL 32117 | 386.257.2956 | METRADEALER.COM

WARNING: THIS LIGHTING PRODUCT IS SOLD FOR OFF-ROAD USE ONLY. This product should not be used on the road. Keep your original factory bulbs so that you can replace them for use on public roads. Keep the box that the new bulbs came in to store the bulbs and be sure to handle them with care when removing and re-installing.

HEISE®
LED LIGHTING SYSTEMS

LOW PROFILE, HIGH OUTPUT

HEISE'S LED BULB MATCHES THE OEM BULB SIZE AND FOOTPRINT

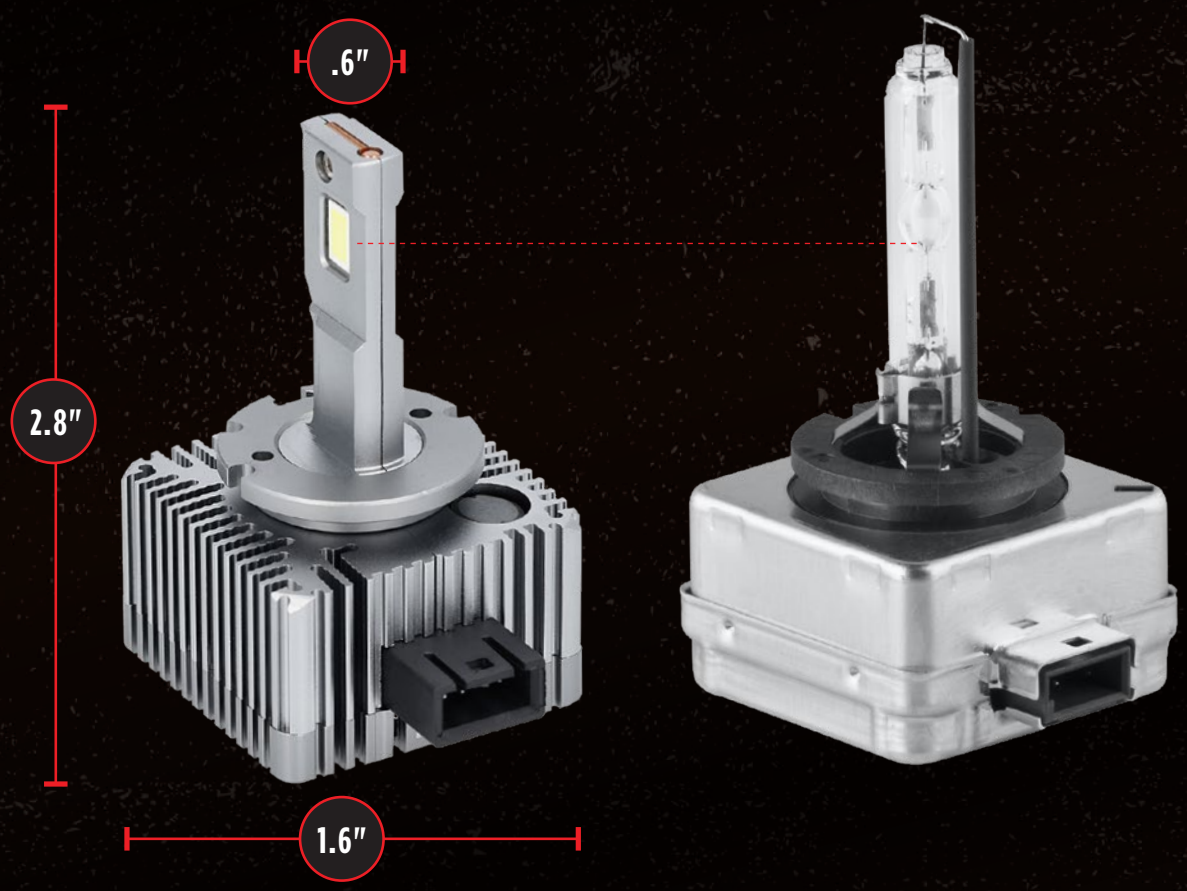

REPLACEMENT **OEM**

www.facebook.com/HeiseLED | www.youtube.com/user/MetraElectronics | www.instagram.com/HeiseLED | Order Anytime Day or Night at www.MetraDealer.com | Download Catalogs at www.MetraOnline.com

HEISELED.COM | 460 WALKER STREET | HOLLY HILL, FL 32117 | 386.257.2956 | METRADEALER.COM

WARNING: THIS LIGHTING PRODUCT IS SOLD FOR OFF-ROAD USE ONLY. This product should not be used on the road. Keep your original factory bulbs so that you can replace them for use on public roads. Keep the box that the new bulbs came in to store the bulbs and be sure to handle them with care when removing and re-installing.

HEISE LED LIGHTING SYSTEMS

PERFECT BEAM PATTERN

FOCUSED BEAM PATTERN

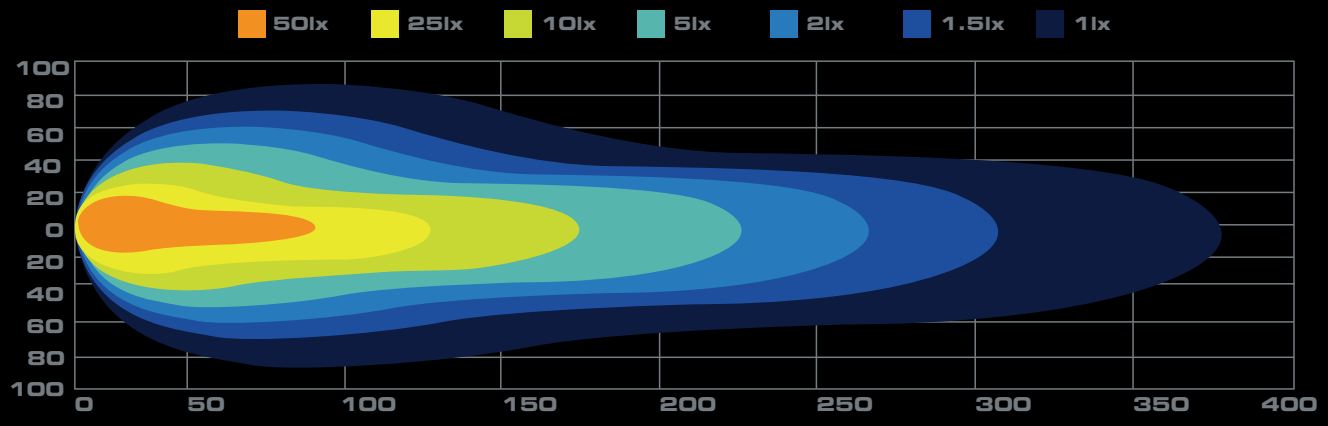

www.facebook.com/HeiseLED

www.youtube.com/user/MetraElectronics

www.instagram.com/HeiseLED

Order Anytime Day or Night at www.MetraDealer.com

Download Catalogs at www.MetraOnline.com

HEISELED.COM | 460 WALKER STREET | HOLLY HILL, FL 32117 | 386.257.2956 | METRADEALER.COM

WARNING: THIS LIGHTING PRODUCT IS SOLD FOR OFF-ROAD USE ONLY. This product should not be used on the road. Keep your original factory bulbs so that you can replace them for use on public roads. Keep the box that the new bulbs came in to store the bulbs and be sure to handle them with care when removing and re-installing.

HEISE®
LED LIGHTING SYSTEMS

WHY UPGRADE TO HID BULBS?

GET INCREASED LIGHTING COVERAGE FOR SAFER NIGHTTIME VISION

www.facebook.com/HeiseLED

www.youtube.com/user/MetraElectronics

www.instagram.com/HeiseLED

Order Anytime Day or Night at www.MetraDealer.com

Download Catalogs at www.MetraOnline.com

HEISELED.COM | 460 WALKER STREET | HOLLY HILL, FL 32117 | 386.257.2956 | METRADEALER.COM

WARNING: THIS LIGHTING PRODUCT IS SOLD FOR OFF-ROAD USE ONLY. This product should not be used on the road. Keep your original factory bulbs so that you can replace them for use on public roads. Keep the box that the new bulbs came in to store the bulbs and be sure to handle them with care when removing and re-installing.